ACAR·MAK·SAN
Machinery Industry

ACRV®
Filtre Sistemleri / Filter Systems

ISO 9001:2008 TSEK CE

GRAVEL (MEDIA) FILTERS

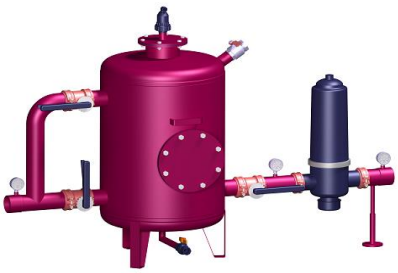

ACAR-MAK-SAN. LTD.CO.
Mersin-Tarsus Org. San. Reg. 2. St., No:20 P.Code: 33115 Akdeniz / MERSIN / TURKEY
T: (+90 324) 221 38 98 pbx F: (+90 324) 221 38 99 www.acarmaksan.com export@acarmaksan.com

MADE IN Turkey

ACAR-MAK-SAN Machinery Industry

ACRV Filtre Sistemleri / Filter Systems

ACRV Filter AKILLI (SMART) ACRV Valve

ISO 9001:2008 TSEK CE

ACAR-MAK-SAN. LTD.CO.
Mersin-Tarsus Org. San. Reg. 2. St., No:20 P.Code: 33115 Akdeniz / MERSIN / TURKEY
T: (+90 324) 221 38 98 pbx F: (+90 324) 221 38 99 www.acarmaksan.com export@acarmaksan.com

TECHNICAL SPECIFICATIONS OF

GRAVEL (MEDIA) FILTER

ACRV Gravel (Media) filter is a type of filter that uses a bed of sand, or other material to filter water for agricultural irrigation, swimming pools, aquaculture, irrigation, stormwater management and other applications. Used for filtering moss and algae formations in the water. Used for waters acquired from lakes, channels, rivers, pools and such water storage units. The most important fact is basalt and quartz sand in Gravel (Media) filter. Acarmaksan advises between 2 and 4 mm basalt sand in filter media.

ACRV Filter produces Gravel (Media) Filters in 18", 24", 36" and 48" body diamters with 2", 2,5", 3", 4", 5", 6" input and output dimensions for various water capacities.

ACRV Gravel (Media) Filter can be used in a system combined with screen fiters, disc filters and hydrocyclone filters.

Superior Features

* Best designed for perfect water distribution during filtering and backwashing.
* High quality corrosion resisting, polyester coated steel tanks.
* Cleaned steel with phosphate pre-treated.
* Reinforced surface with sand/shot blasting.
* Thick layer with high amount paintitng.
* Extended filtration area with high quantity nozlles.
* Tested in high pressures and can operate max in 8 bar.
* Consists of the necessary accessories for constructing a fully operational filtration application, a complete line of manifolds, collectors, standard connectors, valves, granular media types , measurement devicesand control units.
* Wide range of media types and sizes suitable for various filtration applications.
* Can combined with all types of filters to solve many filtering problems.
* Filters are suitable for all automatic control systems.

ACRV Filter uses own programmed control system software. Control panels are equiped with PLC control unit, touch screen, high reaction quality of selenoid valves, transmitters, and high quality electronic accessories.

* Production comply with TSE K 270 Turkish Standart related with ICS 91.140.40 ISO International Standarts, certificated with CE /EC Declararation of Conformity for 2006/42/EC Safety of Machinery.
* Managing with TS EN ISO 9001:2008 with in scope of EA 14-18.
* Produced and ensured by **ACRV Filter** and **ACARMAKSAN** Co.

ACAR-MAK-SAN Machinery Industry

ACRV Filtre Sistemleri / Filter Systems

ACRV Filter · AKILLI (SMART) · ACRV Valve

ISO 9001:2008 · TSEK · CE

ACAR-MAK-SAN. LTD.CO.
Mersin-Tarsus Org. San. Reg. 2. St., No:20 P.Code: 33115 Akdeniz / MERSIN / TURKEY
T: (+90 324) 221 38 98 pbx F: (+90 324) 221 38 99 www.acarmaksan.com export@acarmaksan.com

GFM-30-24 GRAVEL (MEDIA) FILTER

24" BODY 3" INPUT-OUTPUT

TECHNICAL SPECIFICATIONS

Filtering Capacity	42 m3/h
Curved Sheet Metal Thickness	3 mm
Body Sheet Metal Thickness	3 mm
Mushrooms Connection Sheet Thickness	4 mm
Input-Output	3" PN 10 Flange
Buttom Drain	1" Yellow Metal Spherical Valve
Air Discharge Suction	1" Plastic, 1 unit
Mushrooms (nozzles)	37 unit
Legs	3 unit pipe and with plastic wedge
Mushrooms Sheet Metal Lower Support	3 unit
Surface Treatment	Sand/Shot Blasting Process
Paint (Coating)	Epoxy Primer + Polyester Finishing Electrostatic Powder Coating
Paint (Coating) Thickness	200-250 micron
Sand Drainage Covers	6", 1 unit.
Top cover	6", 1 unit.
Connections And Accessories	Included

24" (600mm)

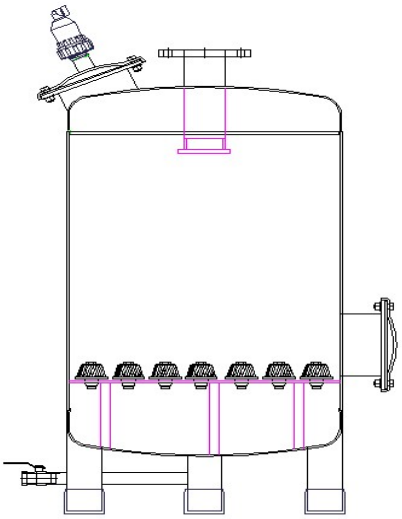

24" (600mm)

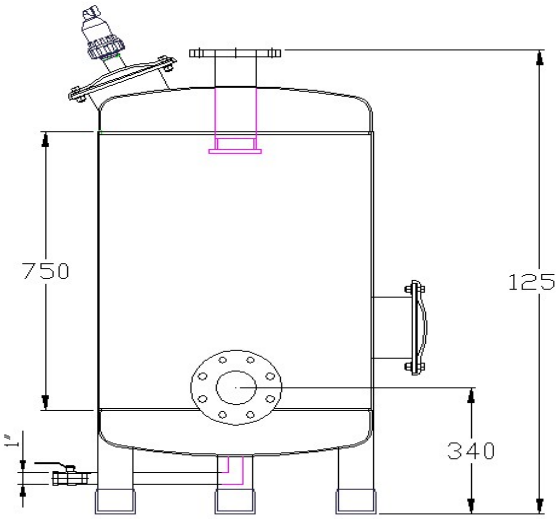

MADE IN Turkey

ACAR-MAK-SAN Machinery Industry

ACRV Filtre Sistemleri / Filter Systems

ACRV Filter AKILLI (SMART) ACRV Valve

ISO 9001:2008 TSEK CE

ACAR-MAK-SAN. LTD.CO.
Mersin-Tarsus Org. San. Reg. 2. St., No:20 P.Code: 33115 Akdeniz / MERSIN / TURKEY
T: (+90 324) 221 38 98 pbx F: (+90 324) 221 38 99 www.acarmaksan.com export@acarmaksan.com

GFM-30-36 GRAVEL (MEDIA) FILTER

36" BODY 3" INPUT-OUTPUT

TECHNICAL SPECIFICATIONS

Filtering Capacity	52 m3/h
Curved Sheet Metal Thickness	4 mm
Body Sheet Metal Thickness	4 mm
Mushrooms Connection Sheet Thickness	4 mm
Input-Output	3" PN 10 Flange
Buttom Drain	1, 1/4" Yellow Metal Spherical Valve
Air Discharge Suction	1" Plastic, 1 unit
Mushrooms (nozzles)	81 unit
Legs	3 unit pipe and with plastic wedge
Mushrooms Sheet Metal Lower Support	8 unit
Surface Treatment	Sand/Shot Blasting Process
Paint (Coating)	Epoxy Primer + Polyester Finishing Electrostatic Powder Coating
Paint (Coating) Thickness	200-250 micron
Sand Drainage Covers	8", 2 unit.
Top cover	6", 1 unit.
Connections And Accessories	Included

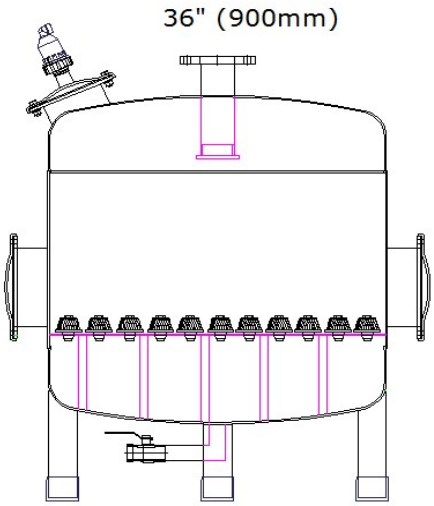

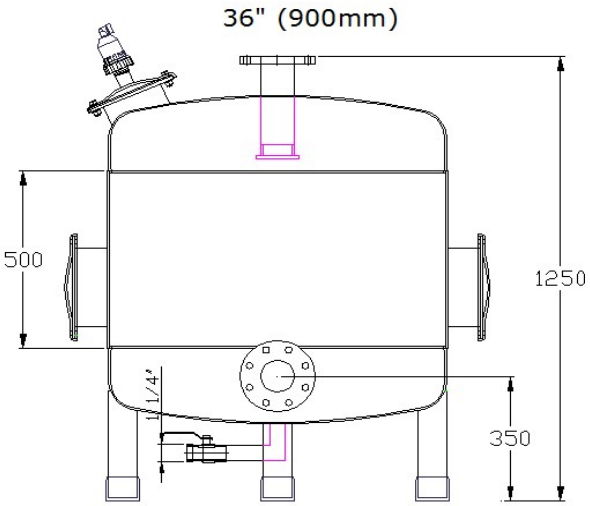

ACAR-MAK-SAN Machinery Industry

ACRV Filtre Sistemleri / Filter Systems

ACRV Filter AKILLI (SMART) ACRV Valve

ISO 9001:2008 TSEK CE

ACAR-MAK-SAN. LTD.CO.
Mersin-Tarsus Org. San. Reg. 2. St., No:20 P.Code: 33115 Akdeniz / MERSIN / TURKEY
T: (+90 324) 221 38 98 pbx F: (+90 324) 221 38 99 www.acarmaksan.com export@acarmaksan.com

GFM-40-36 GRAVEL (MEDIA) FILTER

36" BODY 4" INPUT-OUTPUT

TECHNICAL SPECIFICATIONS

Filtering Capacity	70 m3/h
Curved Sheet Metal Thickness	4 mm
Body Sheet Metal Thickness	4 mm
Mushrooms Connection Sheet Thickness	4 mm
Input-Output	4" PN 10 Flange
Buttom Drain	1, 1/4" Yellow Metal Spherical Valve
Air Discharge Suction	1" Plastic, 1 unit
Mushrooms (nozzles)	81 unit
Legs	3 unit pipe and with plastic wedge
Mushrooms Sheet Metal Lower Support	8 unit
Surface Treatment	Sand/Shot Blasting Process
Paint (Coating)	Epoxy Primer + Polyester Finishing Electrostatic Powder Coating
Paint (Coating) Thickness	200-250 micron
Sand Drainage Covers	8", 2 unit.
Top cover	6", 1 unit.
Connections And Accessories	Included

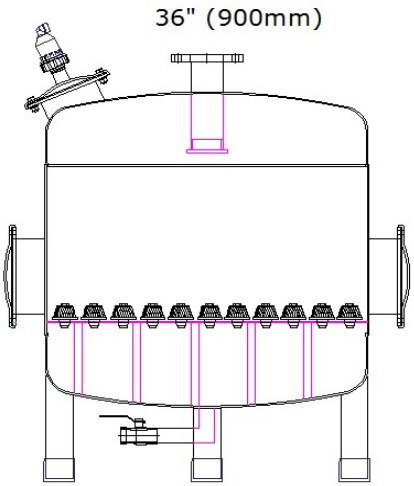

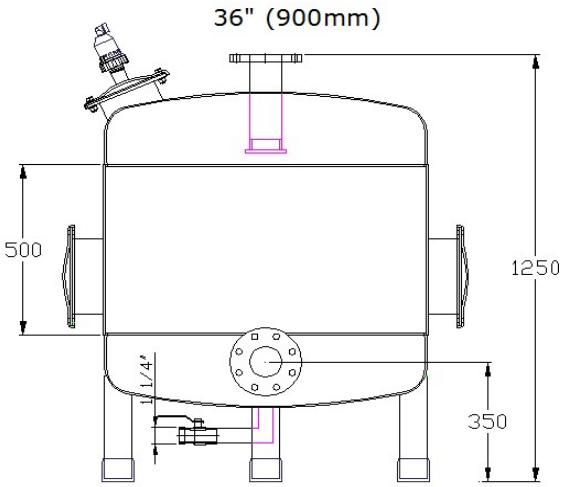

MADE IN Turkey

ACAR-MAK-SAN Machinery Industry

ACRV Filtre Sistemleri / Filter Systems

ACRV Filter AKILLI (SMART) ACRV Valve

ISO 9001:2008 TSEK CE

ACAR-MAK-SAN. LTD.CO.
Mersin-Tarsus Org. San. Reg. 2. St., No:20 P.Code: 33115 Akdeniz / MERSIN / TURKEY
T: (+90 324) 221 38 98 pbx F: (+90 324) 221 38 99 www.acarmaksan.com export@acarmaksan.com

GFM-40-48 GRAVEL (MEDIA) FILTER

48" BODY 4" INPUT-OUTPUT

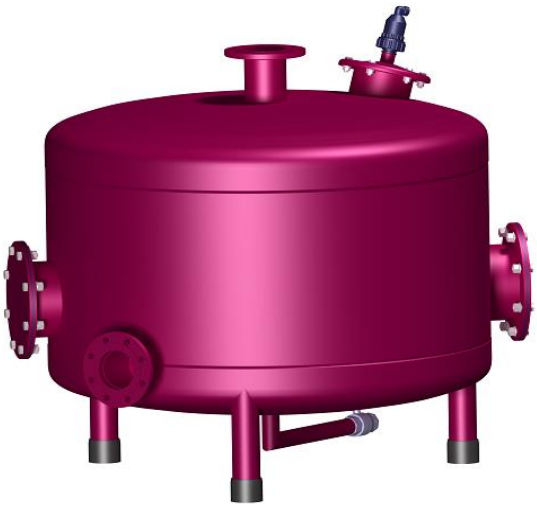

TECHNICAL SPECIFICATIONS

Filtering Capacity	80 m3/h
Curved Sheet Metal Thickness	5 mm
Body Sheet Metal Thickness	5 mm
Mushrooms Connection Sheet Thickness	4 mm
Input-Output	4" PN 10 Flange
Buttom Drain	1, 1/4" Yellow Metal Spherical Valve
Air Discharge Suction	1" Plastic, 1 unit
Mushrooms (nozzles)	121 unit
Legs	3 unit pipe and with plastic wedge
Mushrooms Sheet Metal Lower Support	12 unit
Surface Treatment	Sand/Shot Blasting Process
Paint (Coating)	Epoxy Primer + Polyester Finishing Electrostatic Powder Coating
Paint (Coating) Thickness	200-250 micron
Sand Drainage Covers	8", 3 unit.
Top cover	6", 1 unit.
Connections And Accessories	Included

48" (1200mm)

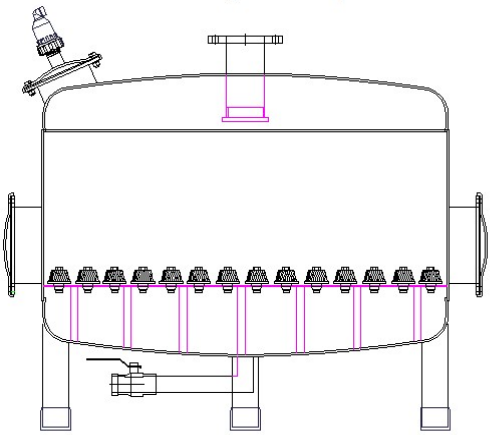

48" (1200mm)

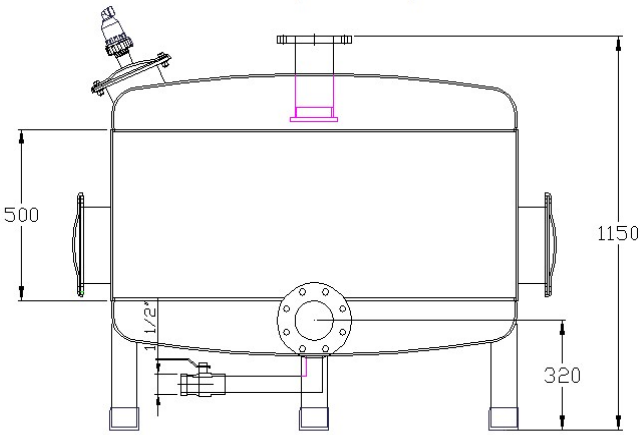

MADE IN Turkey

ACAR-MAK-SAN Machinery Industry

ACRV Filtre Sistemleri / Filter Systems

ACRV Filter AKILLI (SMART) ACRV Valve

ISO 9001:2008 TSEK CE

ACAR-MAK-SAN. LTD.CO.
Mersin-Tarsus Org. San. Reg. 2. St., No:20 P.Code: 33115 Akdeniz / MERSIN / TURKEY
T: (+90 324) 221 38 98 pbx F: (+90 324) 221 38 99 www.acarmaksan.com export@acarmaksan.com

GBMI-PDIS-40 DUAL GRAVEL (MEDIA) FILTER

36" BODY 4" INPUT-OUTPUT

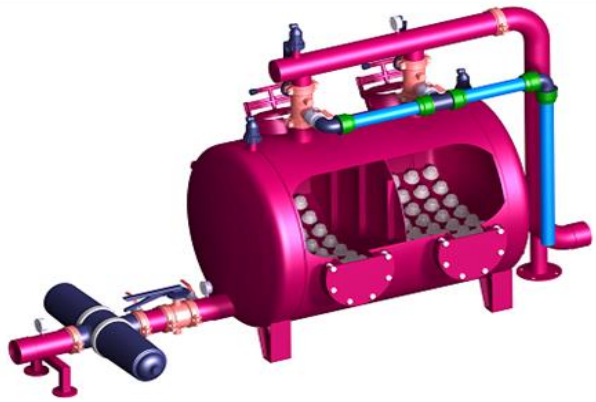

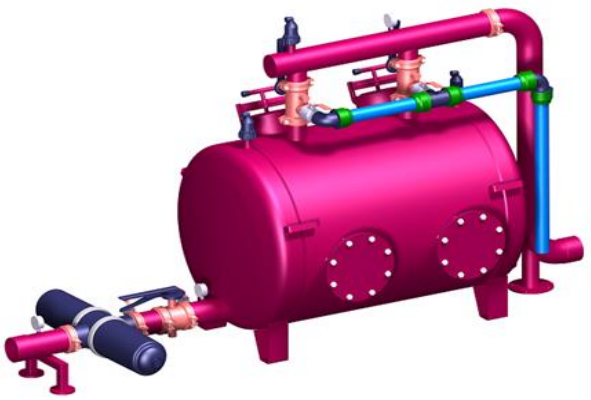

TECHNICAL SPECIFICATIONS

Filtering Capacity	70-90 m3/h
Curved Sheet Metal Thickness	4 mm
Body Sheet Metal Thickness	4 mm
Mushrooms Connection Sheet Thickness	4 mm
Input-Output	4" PN 10 Flange
Buttom Drain	1, 1/4" Yellow Metal Spherical Valve
Air Discharge Suction	1" Plastic, 1 unit
Mushrooms (nozzles)	108 unit
Legs	3 unit pipe and with plastic wedge
Mushrooms Sheet Metal Lower Support	12 unit
Surface Treatment	Sand/Shot Blasting Process
Paint (Coating)	Epoxy Primer + Polyester Finishing Electrostatic Powder Coating
Paint (Coating) Thickness	200-250 micron
Sand Drainage Covers	8", 3 unit.
Top cover	6", 1 unit.
Connections And Accessories	Included

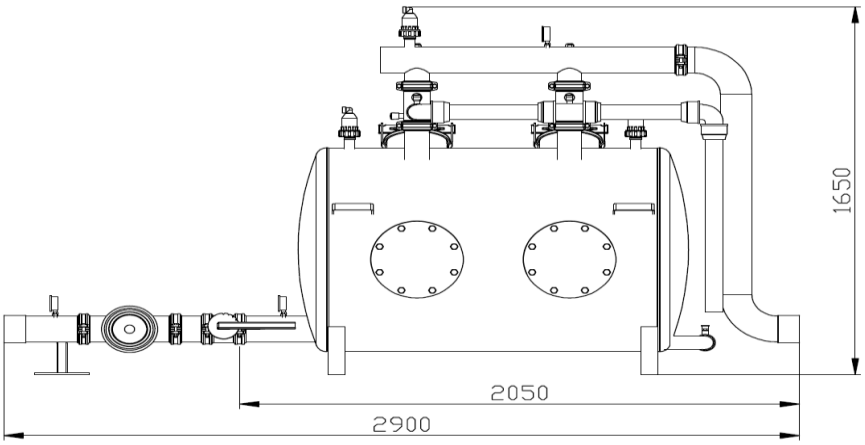

MADE IN Turkey